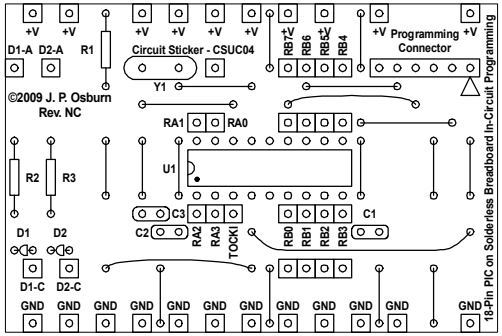

Indiana Kits

http://www.indianakits.com/

James P. Osburn, WD9EYB
2901 Ohio Blvd., Suite 250
Terre Haute, IN 47803
@2009 by James P. Osburn

Circuit Sticker for 18-pin PIC on Solderless Breadboard With In-Circuit Programming

Size	CAGE Code	DWG NO	Rev
A	N/A	CSUC04	NC

Scale		Sheet
		1 of 1